Ultra Compact Type 2+3 hard wired surge protector

MLPX1-230P-W

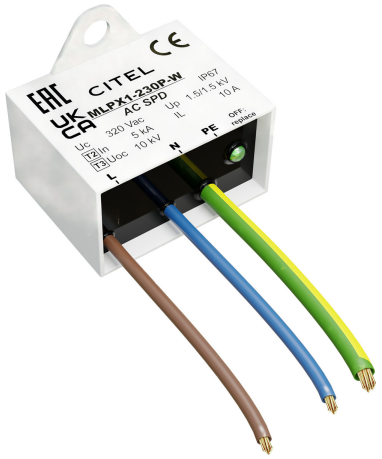

- Ultra compact Type 2+3 hard wired surge protectors
- Wall mounting and hard wired connection
- Bracket breakable
- Protection rating : IP67
- Disconnection signaling by indicator
- EN 61643-11, IEC 61643-11 and UL1449 ed.5 compliance

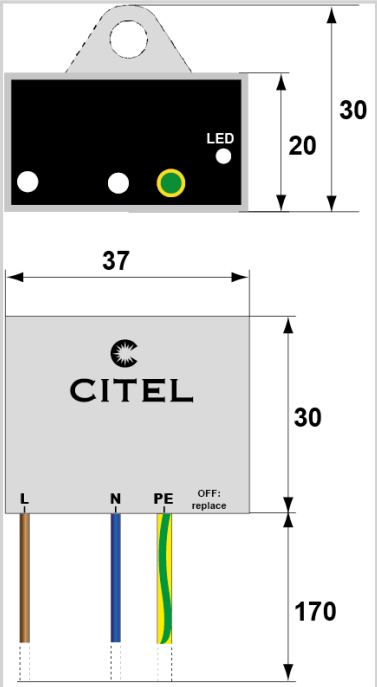

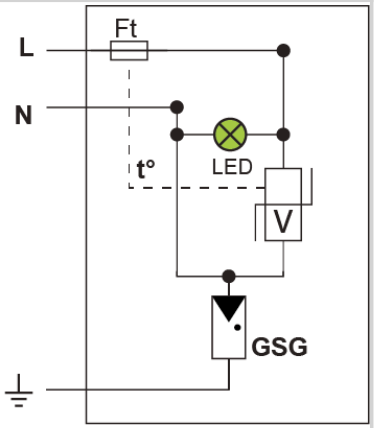

V: Varistor
GSG: Specific gas tube
LED: Disconnection indicator
Ft: Thermal fuse
t°: Thermal system disconnection

Electrical Characteristics		
SPD type	IEC	2+3
Network		220-240 V Single-phase
AC system		TT-TN
Nominal line voltage	Un	230 V
Max. AC operating voltage	Uc	320 Vac
Max. load current @25°C	IL	10 A
Temporary Over Voltage (TOV) Characteristics - 5 sec. *Without disconnection*	UT	335 Vac withstand
Temporary Over Voltage (TOV) Characteristics - 120 mn *Without disconnection or with safety disconnection*	UT	440 Vac disconnection
Temporary Over Voltage N/PE (TOV HT) *Without disconnection or with safety disconnection*	UT	1200 V/300A/200 ms disconnection
Residual Current *Leakage current to Ground*	Ipe	None
Nominal discharge current *15 x 8/20 µs impulses*	In	5 kA
Max. discharge current *max. withstand @ 8/20 µs by pole*	Imax	10 kA
Total Maximum discharge current *max. total withstand @ 8/20 µs*	Imax Total	20 kA
Withstand on Combination waveform IEC 61643-11 *Class III test: 1.2/50µs - 8/20µs*	Uoc	10 kV
Withstand on overvoltages IEEE C62.41.1		10 kV / 10 kA
Protection mode(s)		Common/Differential mode
Protection level L/N *@ In (8/20µs)*	Up L/N	1.5 kV
Protection level L/PE *@ In (8/20µs)*	Up L/PE	1.5 kV
Admissible short-circuit current	Isccr	10 000 A
Mechanical Characteristics		
Technology		MOV+GDT
Connection to Network		By wires: 1.5mm² (L/N) and 2.5mm² (PE)
Mounting		Wall or plate
Housing material		Thermoplastic UL94 V-0
Operating temperature	Tu	-40/+85°C
Protection rating		IP67
Failsafe mode		Disconnection from AC network
Disconnection indicator		LED green OFF
Operating indicator		Green Led ON
Dimensions		See diagram
Disconnectors		
Thermal disconnector		Internal
Installation ground fault breaker		Type 'S' or delayed
Standards		
Standards compliance		IEC 61643-11 / EN 61643-11 / UL1449 ed.5
Certification		
Part number		
7112646		